Smart Audio Product Line

Official website:

www.rock-chips.com

Rockchip Hotline:

0086-591-83991906 Ext: 8198

Service e-mail:

service@rock-chips.com

Rockchip Product line

Tablet ARM PC

- RK3588
- RK3566
- RK3399
- RK3288
- RK3368
- RK3326
- RK3128
- RK3126

CHIP: In developing

TV BOX Dongle

- RK3399
- RK3288
- RK3368
- RK3328
- RK3229
- RK3228
- RK3128
- RK3036

CHIP: MP Ready

Audio

- RK3566
- RK3326
- RK3308
- RK3229
- RK2206
- RK2108
- NanoD
- NanoC

Vision

- RK1608
- RV1126
- RV1109
- RV1108
- RV1107

PMIC Interface

- RK819
- RK818
- RK817
- RK816
- RK812
- RK809
- RK808
- RK807
- RK805

RK3566 Specifications

Core
- Quad-core ARM Cortex-A55
- G52 2EE, support OpenGL ES1.1/2.0/3.0/3.1/3.2,Vulkan 1.1, OpenCL 2.0

Memory
- 32bit DDR4/DDR3L/LP4/LP4X/LP3
- Support MLC NAND, eMMC 5.1, Serial Nor Flash

NNIP
- 0.8Tops NPU

Multi-Media
- 4KP60 H.265/H.264/VP9 Profile0 2 decoderr
- 1080P60 H.264/H.265 video encoder

Display
- Single Channel LVDS/MIPI DSI, HDMI, eDp, Eink

Camera
- 8M Pixel ISP HDR
- MIPI-CSI2, 1x4-lane/2x2-lane@2.5Gbps/lane
- CIF 150MHz,Support BT.656/601/1120

Audio
- 1x 8ch I2S, 1x 8chI 2S/TDM, 2x2ch I2S
- 8ch PDM
- SPDIF OUT

External interface
- SDIO 3.0 x3interface for Wi-Fi and SD card
- I2C/I2S/UART/SPI interface
- GMACx1(10/100/1000M)
- USB2.0 HOST+OTG and USB3.0 HOST

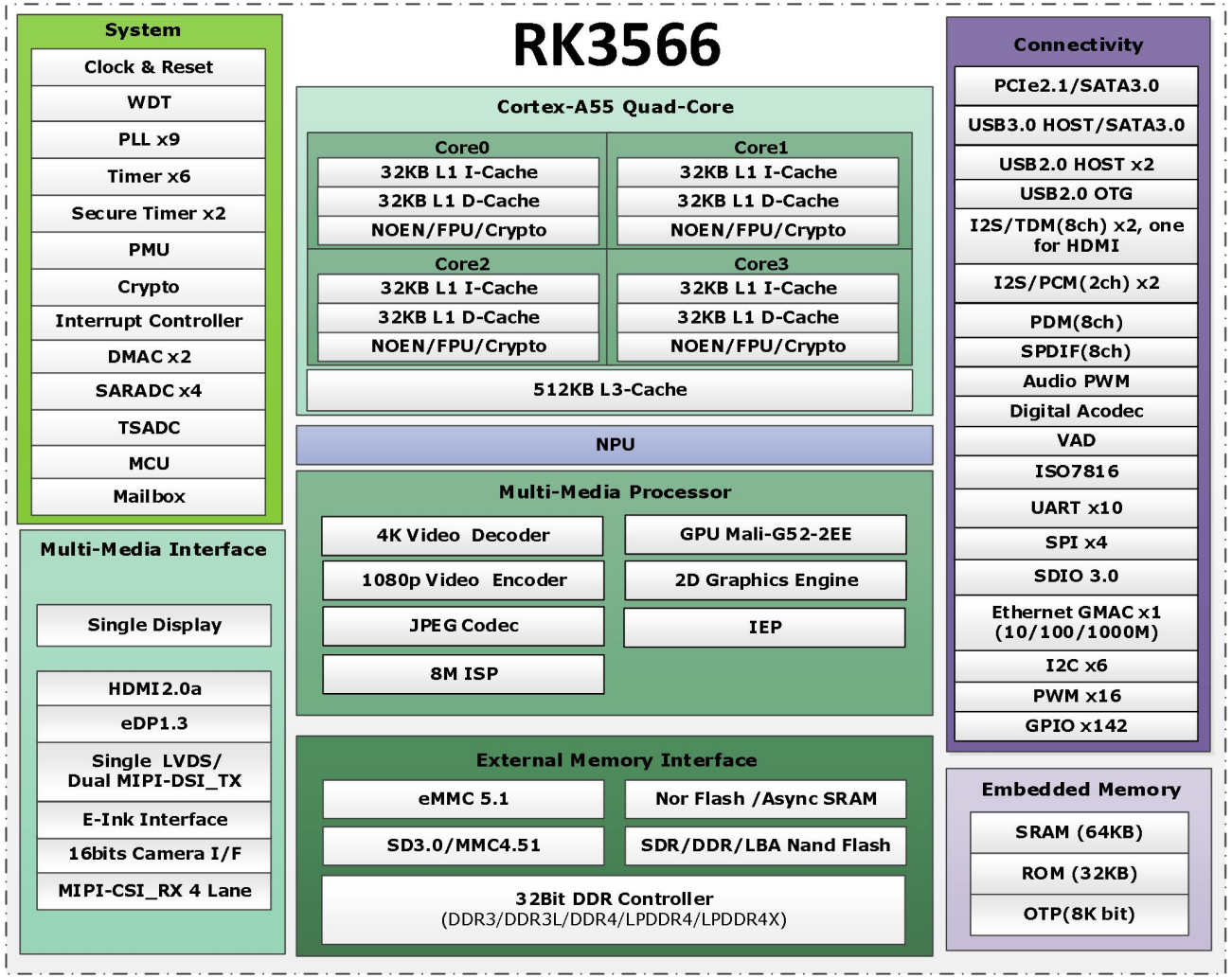

RK3326 Specifications

- 64bit Quad-core ARM Cortex-A35 CPU
- ARM G31 MP2 GPU, Support OpenGL ES3.2, Vulkan 1.0, OpenCL 2.0
- 32bit DDR4-1600/DDR3-1600/DDR3L-1600/LPDDR3-1600/LPDDR2-1066
- RGB/LVDS/MIPI display
- 1080P60 H.265/H.264 decoder, 1080P30 H.264 encoder
- 8M ISP, 4Lanes MIPI CSI
- Nand, SPI Nor FLASH, eMMC4.51, SDIO 3.0
- One 8ch I2S/TDM, two 2ch I2S/PCM, one 8ch PDM
- Secure video path, OTP, TrustZone
- Connectivity
  - USB 2.0 OTG
  - 2x UART, 2x SPI, 3x I2C, 2x PWM
- Package
  BGA 14mm*14mm

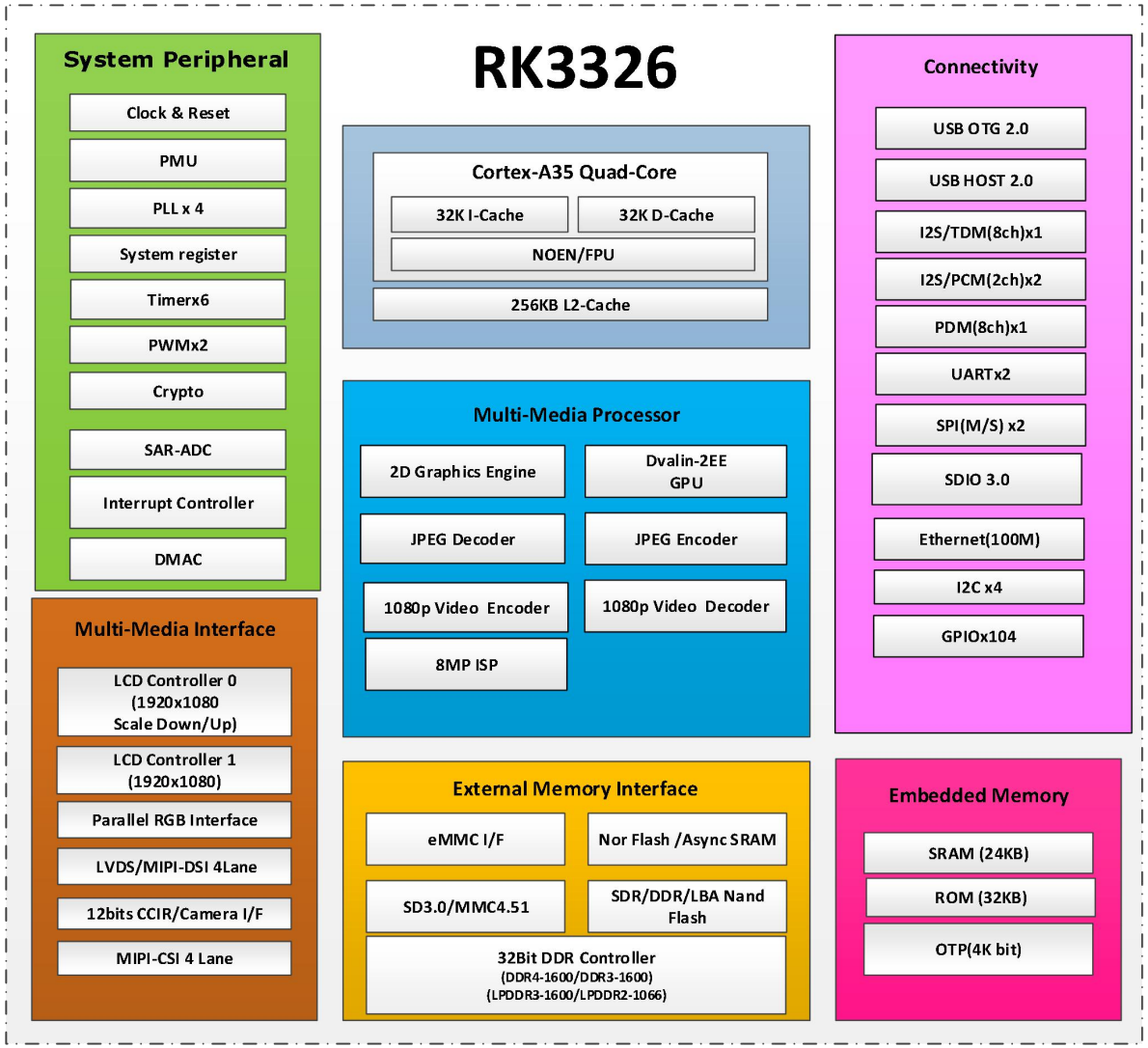

RK3326 Smart Audio System Diagram

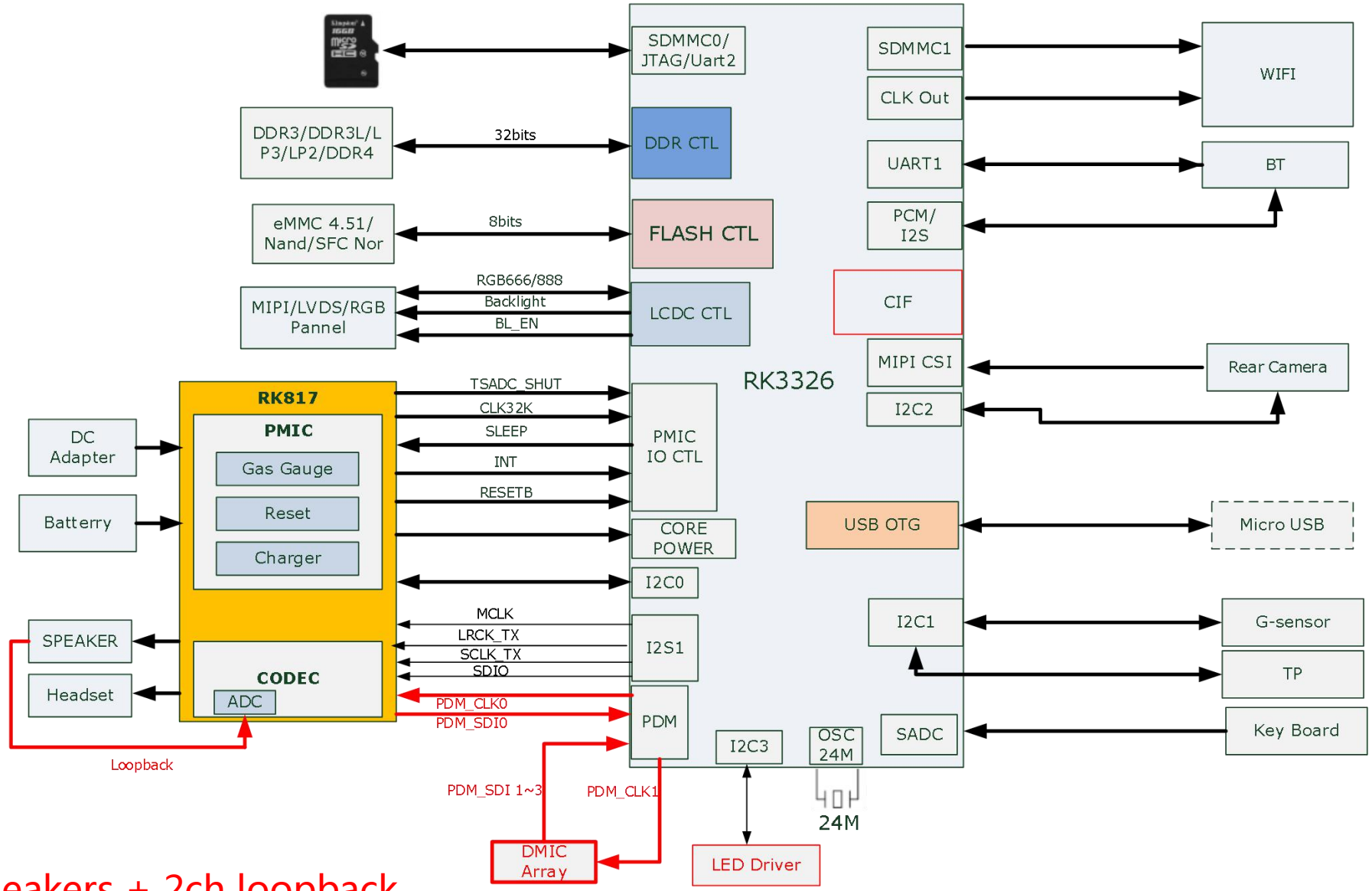

Note:
Max 6 MICs + 2ch Speakers + 2ch loopback.

RK3308 Specifications

- Quad-core ARM Cortex-A35
- DDR3/DDR3L/DDR2/LPDDR2 16bit
  - Embedded 64MB/128MB (Option)
- Nand, SPI Nor FLASH, eMMC4.51
- SD/MMC SD3.0
- SDIO 3.0
- RGB/MCU Display Interface
- Digital Audio Interface
  - 8TX+8RX, 8CH, 2CH I2S/TDM/PCM
  - 8CH PDM IN
  - SPDIF IN/OUT HDMI ARC
- Acodec
  - 8x ADC for MIC IN and LINE IN
  - Stereo HP OUT & LINE OUT
- Voice Activation Detection
- Connectivity
  - USB 2.0 HOST + USB 2.0 OTG
  - RMII 100M
  - 5x UART 3x SPI 4x I2C
  - 4x PWM 6x SARADC

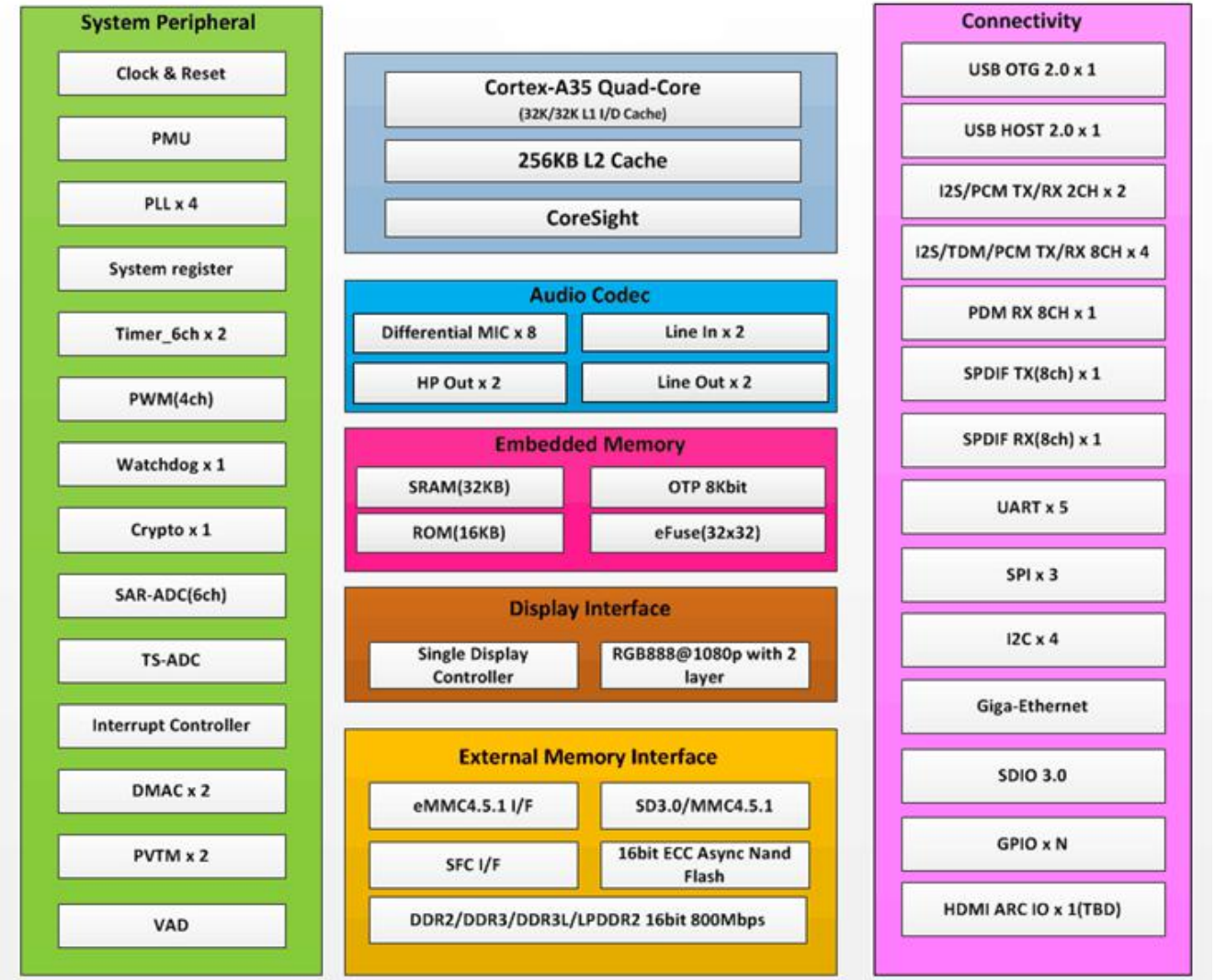

RK3308 Smart Audio System Diagram

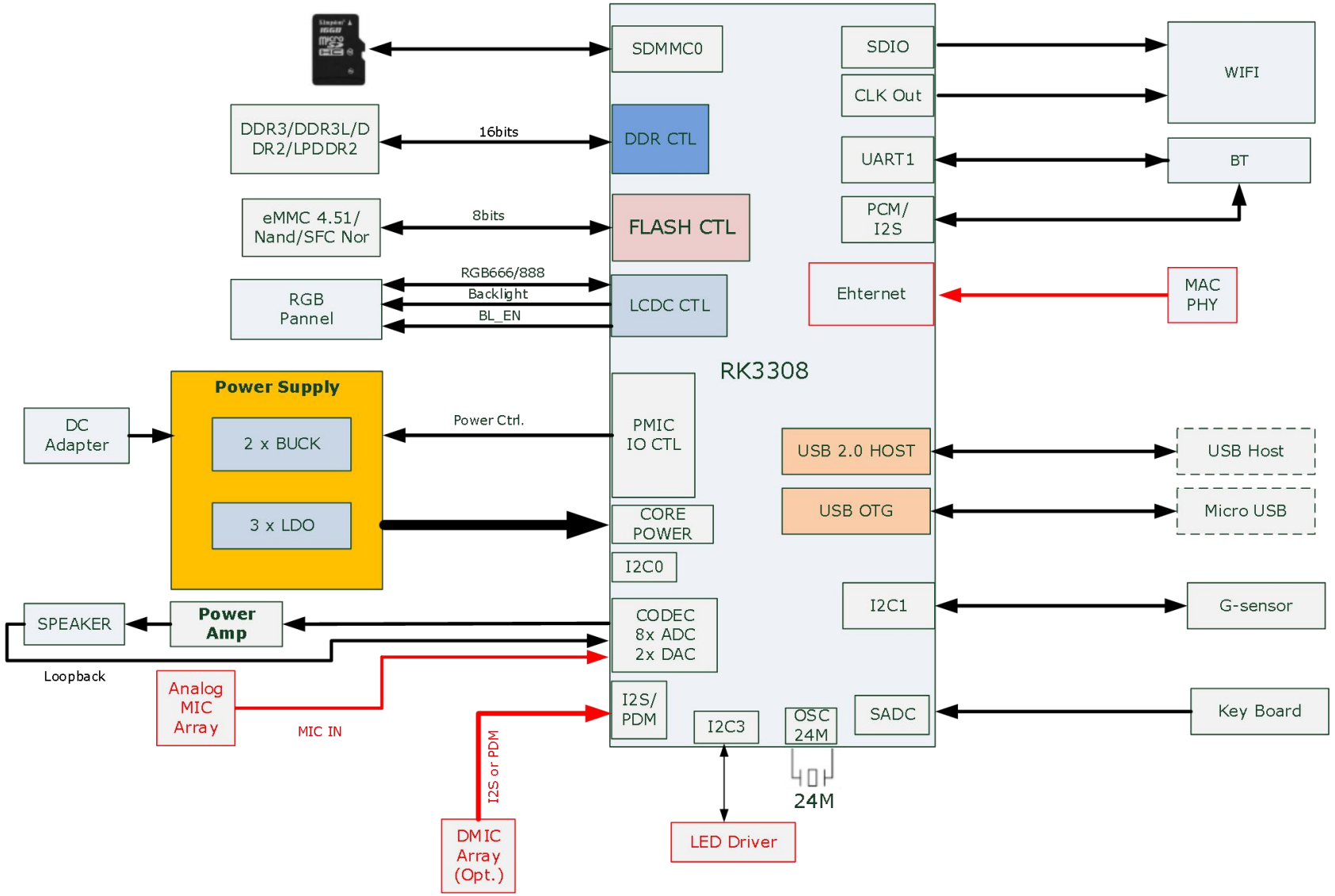

RK2108 Specifications

- ARM Cortex-M4F
- Cadence Tensilica HiFi3 Audio DSP
- Embedded 1.5MB SRAM+DTCM
- Embedded LDOs
- SPI Nor FLASH,
- SD/MMC 3.0 SDIO 3.0
- Digital Audio Interface
  - 4CH TX,2CH RX I2S/PDM/PCM
  - 6CH RX,2CH TX I2S
- Acodec
  - 2x ADC for MIC IN and LINE IN
- Connectivity
  - USB 2.0 Device
  - MIPI DSI / MCU LCD interface
  - 12bit DVP camera interface
  - UART , SPI , I2C , PWM
  - Total 42 GPIOs
- Package QFN68 7*7 FCCSP 3.8*4.5

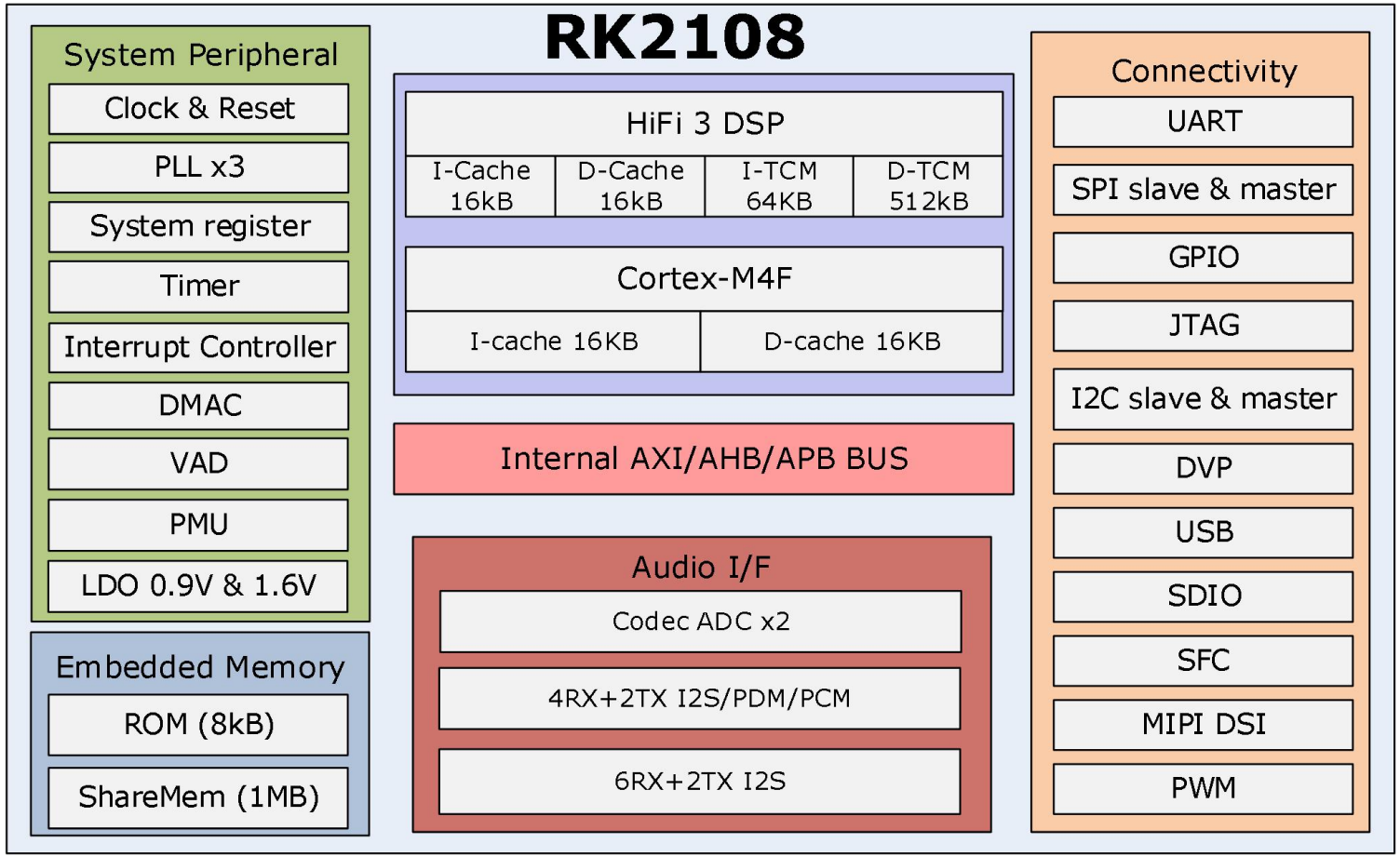

RK2206 Specifications

- ARM Cortex-M4F
- Cadence Tensilica HiFi3 Audio DSP
- WLAN 802.11 b/g/n
- Embedded PSRAM
- Embedded SPI Nor FLASH
- SDMMC3.0
- Acodec (RK812)
  - 3x ADC 1xDAC
  - Class D Audio PA
- Digital Audio Interface
  - 4CH I2S/TDM/PCM
- Connectivity
  - USB 2.0 OTG
  - MCU LCD Interface
  - 8bit DVP Camera Interface
  - UART , SPI , I2C , PWM
- Package QFN68 7*7

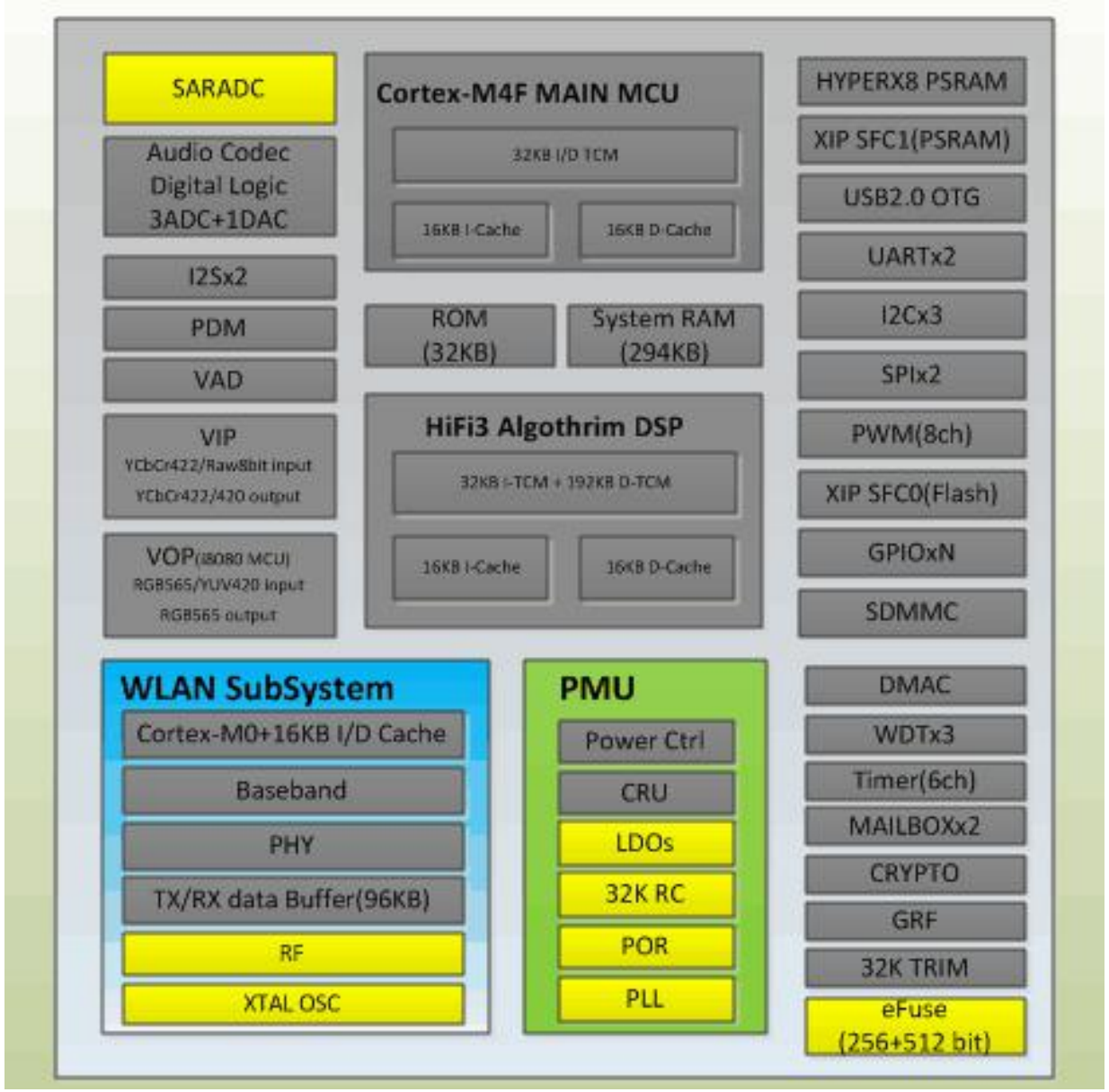

IoT Devices

Small Appliances

Smart Lamp

Electric Fans

....

Rockchip RK2108

Rockchip RK2206

Household Electrical Appliances

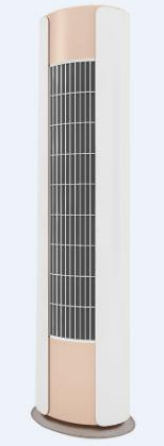

Air Condition

Kitchen Range Hood

....

IoT Device

Smart Home Panel

Voice Remote Controller

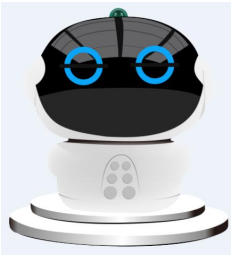

Story Machine

....

	RK2108	RK2206	RK3308	RK3326	RK3566
CPU	M4F >300M	M4F >192M	Qual Core ARM A35	Qual Core ARM A35	Qual Core ARM A55
GPU				ARM G31 MP2	G52 2EE
DSP	HIFI3 >400M	HIFI3 >192M	-		
NPU	-	-	-	-	0.8Tops
Flash	SPI NOR Flash	Embedded SPI NOR Flash 2MB,4MB,8MB	SLC NAND Flash SPI NOR/NAND Flash EMMC	NAND Flash SPI NOR/EMMC	NAND Flash SPI NOR/EMMC5.1
ADC	2	3(RK812)	8	2(RK817 or RK809)	外挂codec
PDM	4ch IN	2ch IN	8ch IN	8ch IN	8ch IN
I2S	Max 6ch IN 2ch OUT	Max 4ch IN 4ch OUT	Max 16ch IN 16ch OUT	Max 8ch IN 8ch OUT	Max 8ch IN 8ch OUT
Display	MCU/SPI/MIPI	MCU/SPI	RGB/MCU/SPI	MIPI/RGB/MCU/SPI	MIPI/LVDS/eDP/HDMI/EINK
USB	1x Device	1x OTG	1x OTG 1x Host	1x OTG	1x 2.0 OTG 1x 2.0 Host 1x 3.0 Host
WIFI	-	Embedded 802.11n	-	-	-
Operating System	RTOS	RTOS	Linux	Android/Linux	Android
特点	Low power consumption, up to 4mic front-end processing, support offline commands	Built-in wifi, high integration, the chip integrates all the main peripheral devices	Audio dedicated, with strong computing power, meeting the algorithm requirements of products above 4mic, with very rich interfaces	Support multiple MIC arrays, powerful video encoding and decoding capabilities, and support dual cameras	The latest ARM architecture CPU and GPU, built-in NPU, 22nm process, specially optimized for the high performance and low power consumption of new screen speakers

Thank you!

Contact us:
No.18 Building, No.89, Software Boulevard, TongPan Rd, Fuzhou, Fujian, PRC
P.C:350003
TEL:0591-83991906/83991907
FAX:0591-83951833